3" Box Clamp Scupper Aluminum

Part #	Size	Weight
300-3315	3"	3.2 lbs
300-3199	Strainer kit only	

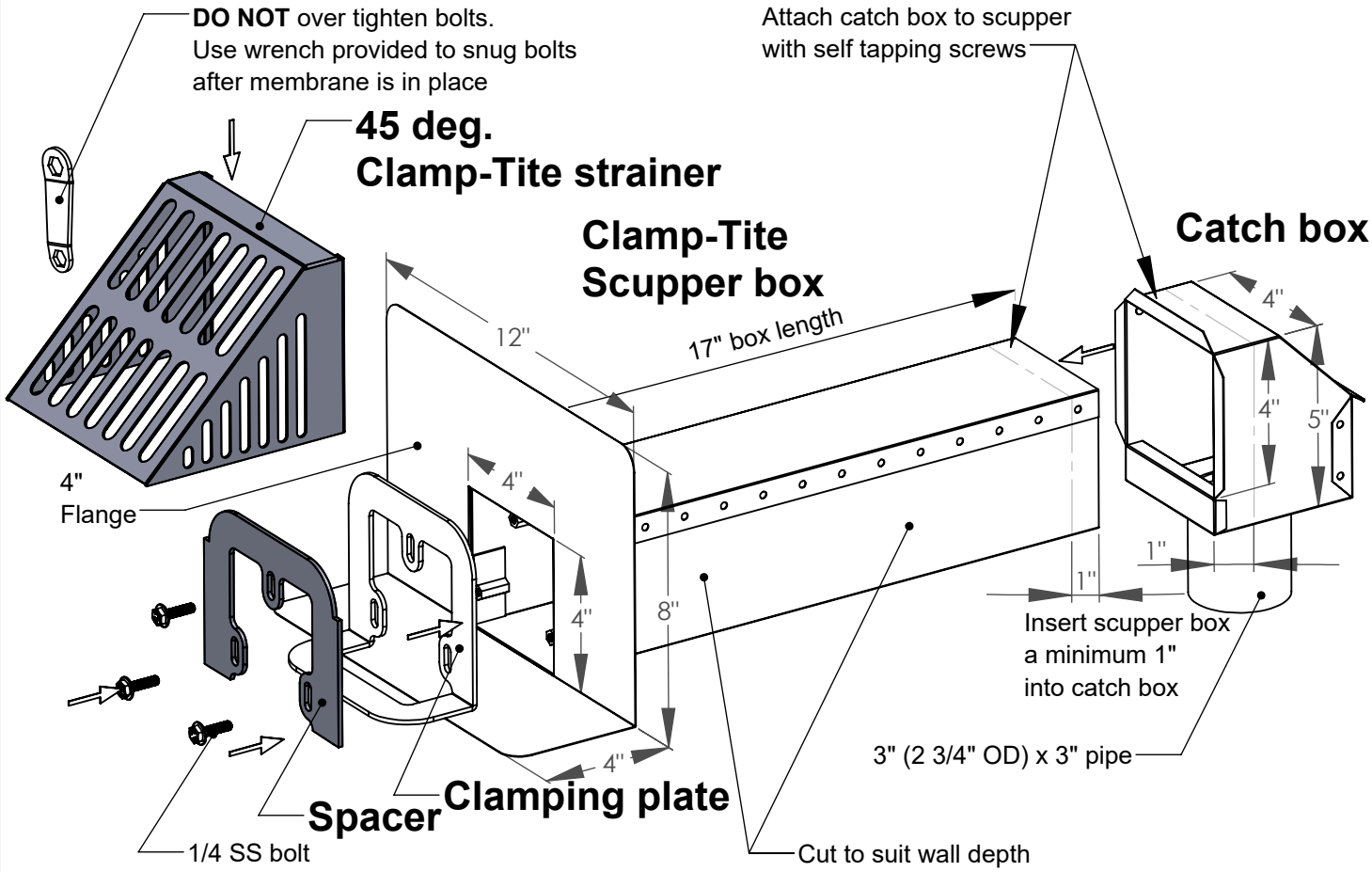

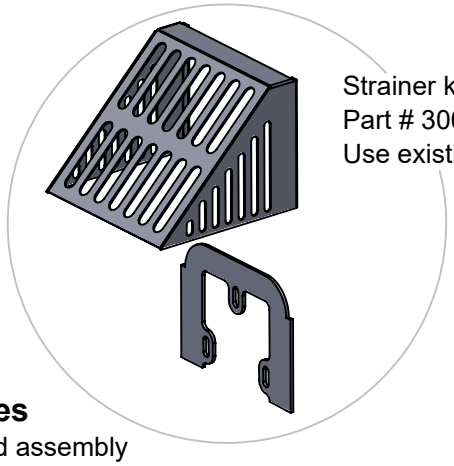

Strainer kit sold separately
Part # 300-3199
Use existing bolts

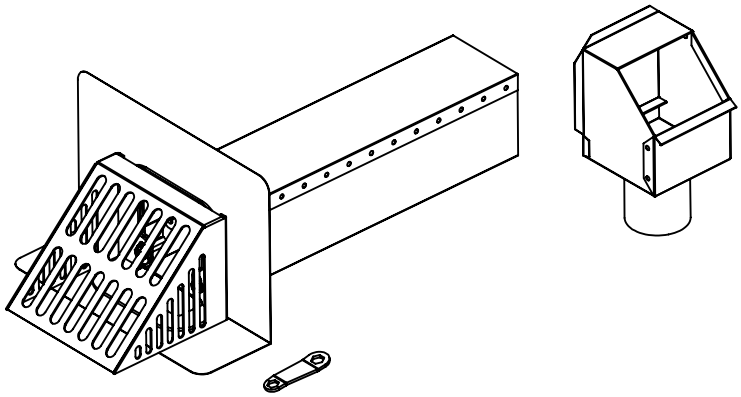

Features

- Hotweld assembly
- All fasteners are stainlesss steel and aluminum
- Available with TPO Direct Weld flange
- Longer outlet boxes available

Innovative Ideas Since 1978

PROPRIETARY AND CONFIDENTIAL

THE INFORMATION CONTAINED IN THIS DRAWING IS THE SOLE PROPERTY OF MENZIES METAL PRODUCTS.
ANY REPRODUCTION IN PART OR AS A WHOLE WITHOUT THE WRITTEN PERMISSION OF MENZIES METAL PRODUCTS IS PROHIBITED.

DATE: 07/01/17
DRAWN BY: ZV
COMMENTS:
DO NOT SCALE DRAWING

Part title & J#
3" Box Clamp Scupper Aluminum

SIZE
A

19370 - 60th Ave., Surrey, BC V3S 3M2
Ph: 604-530-0712
Fax: 604-530-8482
www.menzies-metal.com